Wind Energy Education and Research at UNL

Jerry Hudgins
Director of Nebraska Wind Applications Center
Associate Director of
Nebraska Center for Energy Sciences Research

Curriculum

Wind Programs of Study

- Electrical Engineering
- Mechanical Engineering
  - Fluid flow (aerodynamics)
  - Blade design
  - Gearbox
- Geosciences
  - Wind resources

Electrical Engineering

Wind System or Sub-system	Course Title
Generators	Electric Machines
Power Converters	Power Electronics
Turbine Controls	Control Systems
Distributed Generations and Grid Issues	Power Systems Analysis
Wind Systems Engineering	Wind Energy

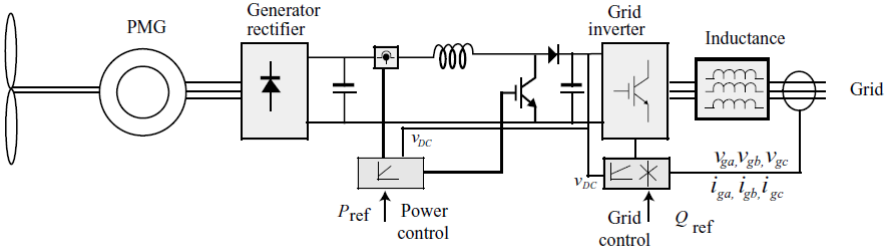

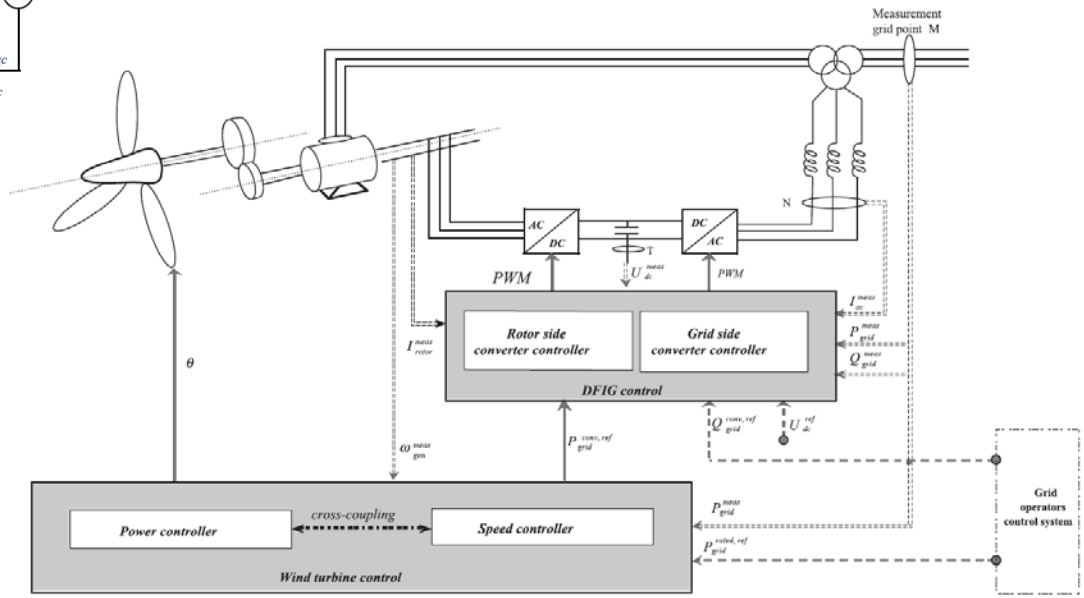

Courses in Power and Sustainable Energy – Electrical Engineering

400-Level are Senior Courses, 800-Level are Beginning Graduate Courses, 900-Level are Advanced Graduate Courses

Power Systems (Enrollment)

- 438/838. Introduction to Electric Power Engineering (26)
- 406/806. Power Systems Analysis (8)
- 407/807. Power System Planning (9)
- 454/854. Power Systems Operation and Control (11)
- 957. Advanced Computer Methods in Power System Analysis

Power Electronics and Machines (Enrollment)

- 428/828. Power Electronics (21)
- 498c/898c. Electric Machines (11)
- 996. Power Semiconductor Devices

16 Students currently meeting requirements in Power and Energy Systems Concentration

Sustainable Energy (Enrollment)

- 498b/898b. Wind Energy* (20)
- 498d/898d. Solar Energy (19)
- 978. Solar Cells: Theory and Applications

Control Systems (Enrollment)

- 444/844. Linear Control Systems* (32)
- 945. Optimal Control Theory

*These courses delivered to PKI from Lincoln

Wind Energy Systems – Nebraska Energy Science Minor

- Available to all majors at UNL
- Three-course sequence required followed by three courses of appropriate electives

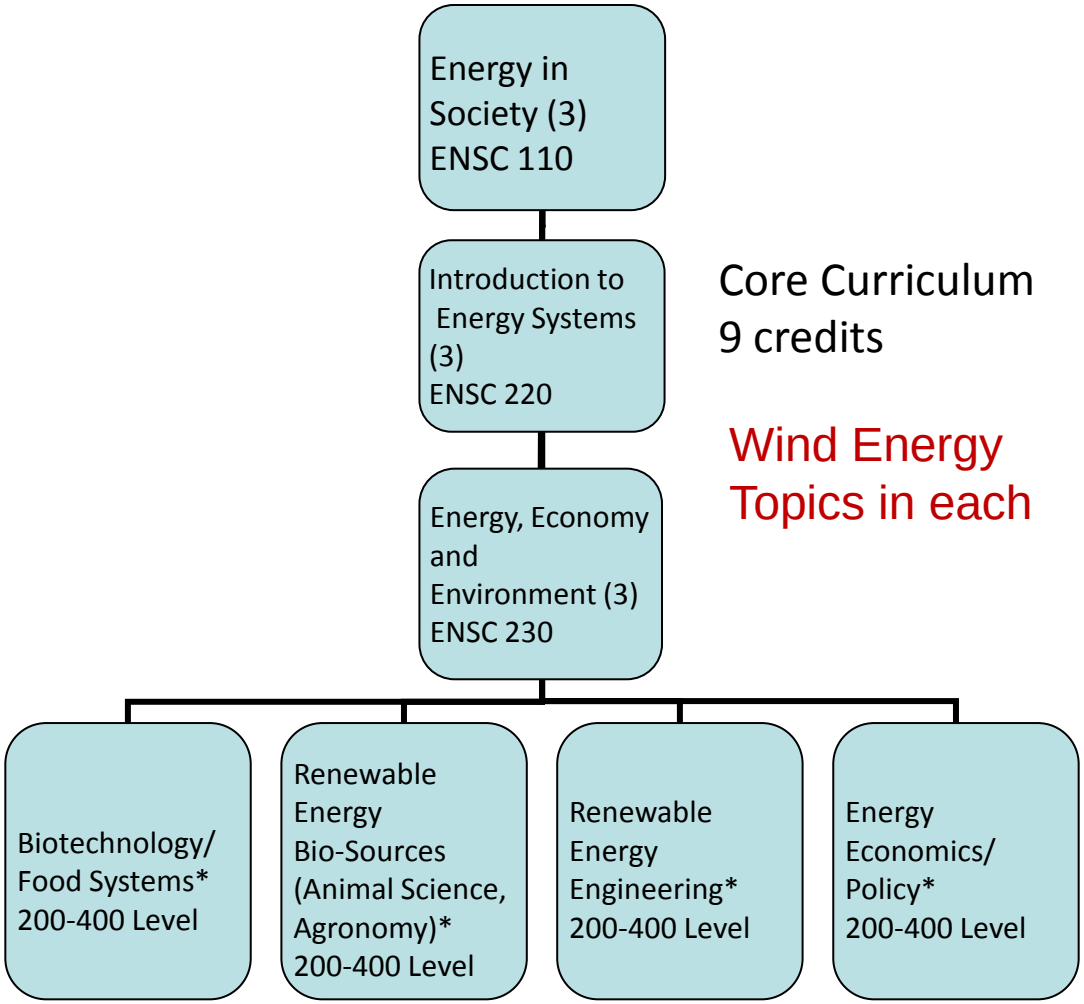

Core Curriculum 9 credits

Wind Energy Topics in each

Elective Curriculum 9 credits

Student Projects: Examples

- Senior Design Teams and Individual Projects
  - Integration of PV array and small wind turbine on dc bus
  - Data logging and telemetry for wind and solar hybrid system
  - MET tower data logging and wireless transfer
  - Power converters for solar array and wind turbine system for battery charger and ac power
  - Wind resource assessment and siting
  - Small wind turbine installations and grid connection
  - Permanent Magnet Generator design, fabrication, and testing
    - Linear
    - Axial Flux

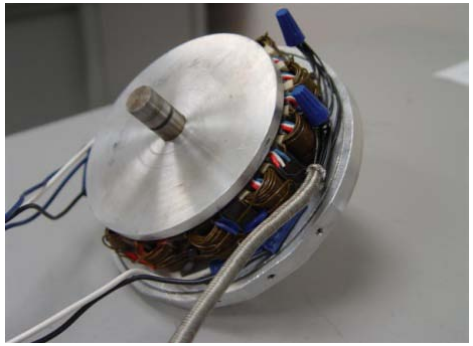

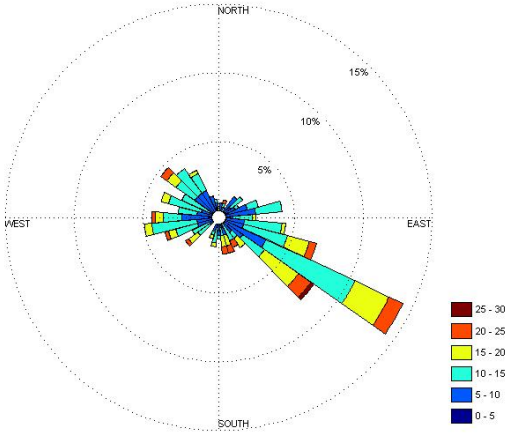

Wind Energy Research

Power Systems Research

- Advanced Computer Applications in Planning, Design, and Operation of Electric Power Systems

- Modeling and Simulation of Power Systems Under Uncertainty

- Optimum Maintenance Strategies for Maximizing the Availability of Wind Farms

- Survivability and Vulnerability Assessment of Energy Infrastructure

- Monitoring, Diagnostics, and Control of Electric Power Systems

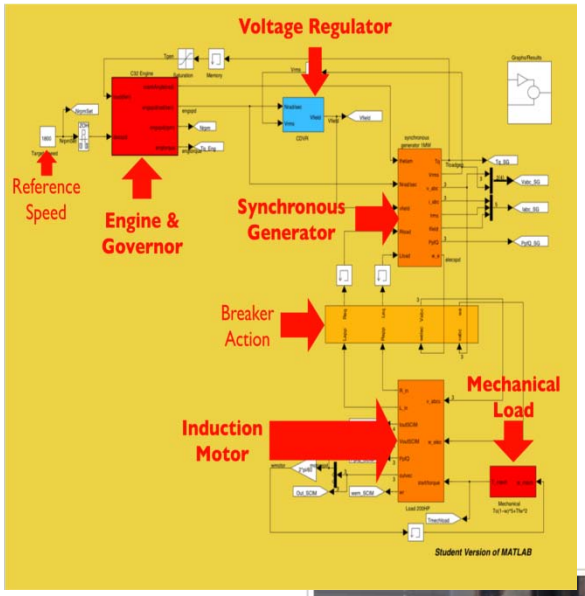

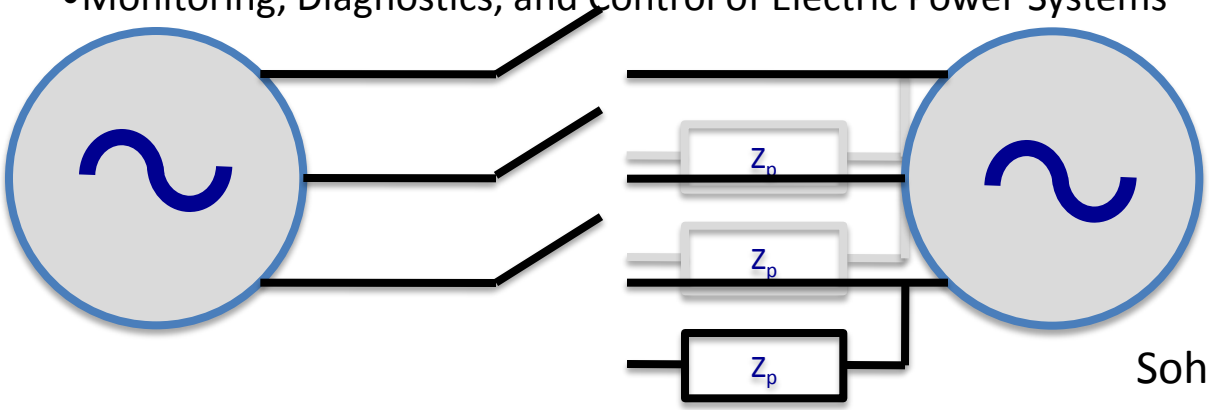

Professor
Sohrab Asgarpoor

Distributed and Smart Power

- Renewable energy systems and distributed generation
- Microgrids
- Wind Turbine Diagnostics
- Power electronics
- Computational intelligence and its application in electric energy systems

A roadway wind/solar hybrid power generation and distribution system

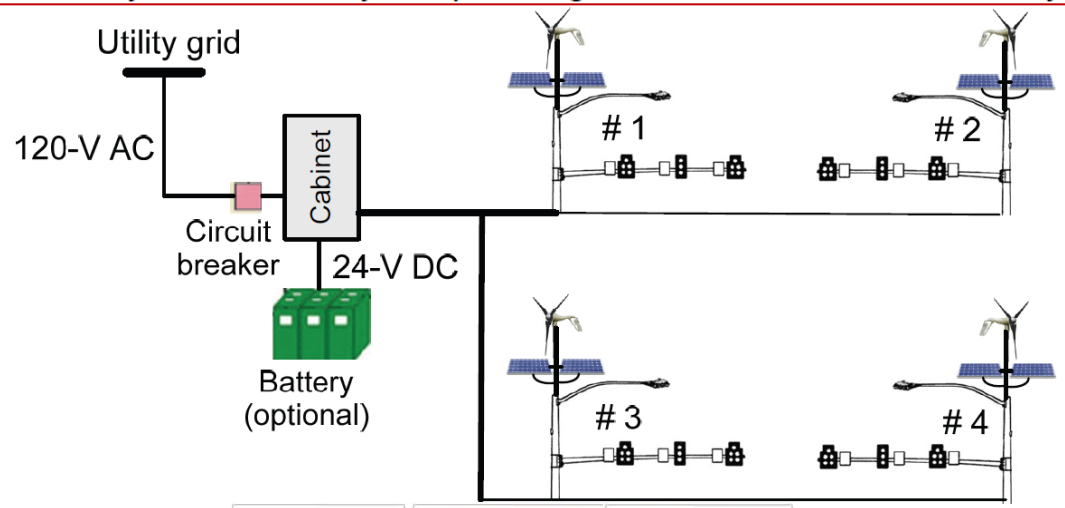

Transportation Engineers:
Anuj Sharma, Elizabeth Jones, Laurence Rilett
Electrical Engineer:
Jerry Hudgins

Professor Wei Qiao

Wind Turbine Diagnostics

Blades

- Imbalance, aerodynamic asymmetry
- Surface roughness and defects, icing
- Fatigue, cracks on surface, internal and impending cracks
- Delaminations

Bearings

- Wear, pitting, deformation, generalized roughness of raceways, rolling elements, and cage

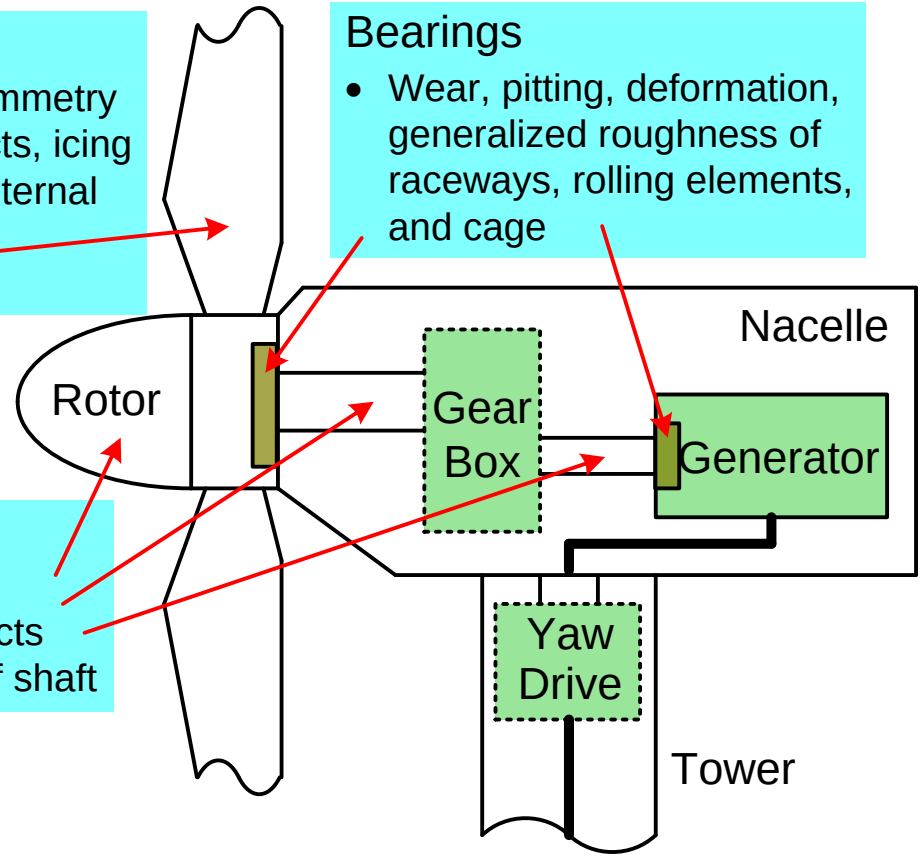

Rotor and shaft

- Imbalance
- Surface roughness and defects
- Fatigue, impending cracks of shaft

Energy Systems, Power Electronics, and Electric Machines

Wind Generator Designs and Intermediate Energy Storage

Professor Dean Patterson

Li-polymer Batteries

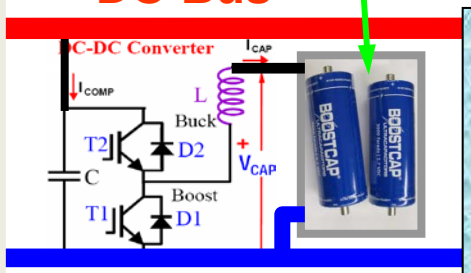

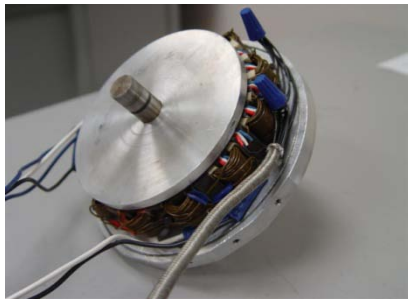

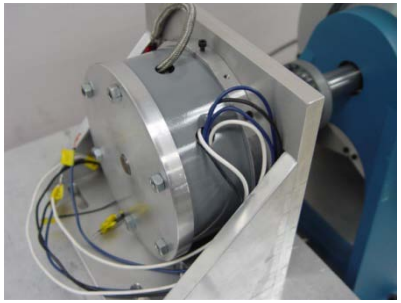

Axial Flux Permanent Magnet Generator

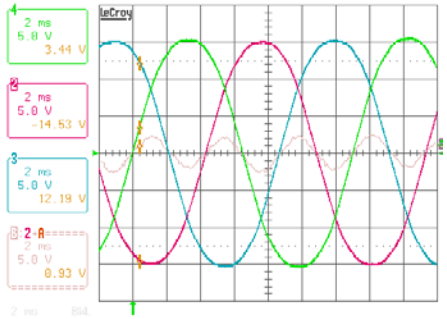

Example Publication: **"Maximum Power Extraction from A Small Wind Turbine Using 4-phase Interleaved Boost Converter,"** L. Ni, D.J. Patterson, and J.L. Hudgins, *IEEE Power Electronics & Machines in Wind Applications Conference Record*, Digital Object Identifier**:** 10.1109/PEMWA.2009.5208329, pp. 1-5, June 24-26, 2009.

Wind for Schools, Energy Storage for Wind Applications

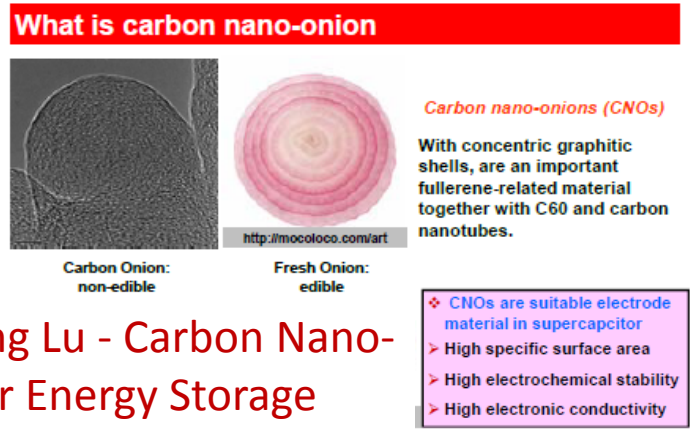

Dr. Yonfeng Lu - Carbon Nano-Onions for Energy Storage

Hydrogen Production from Wind Sources

UNL Test Turbine

Wind for Schools (WfS)

Engage rural communities in the concept that wind offers an alternative energy and economic future for rural America

Engage rural school teachers and students in energy education, specifically wind energy

Equip college juniors and seniors in wind energy applications and education to provide the growing U.S. wind industry with interested and equipped engineers

Professor Jerry Hudgins

Nebraska Wind Applications Center provides support for the WfS Program (funded by NREL)

Partner Schools

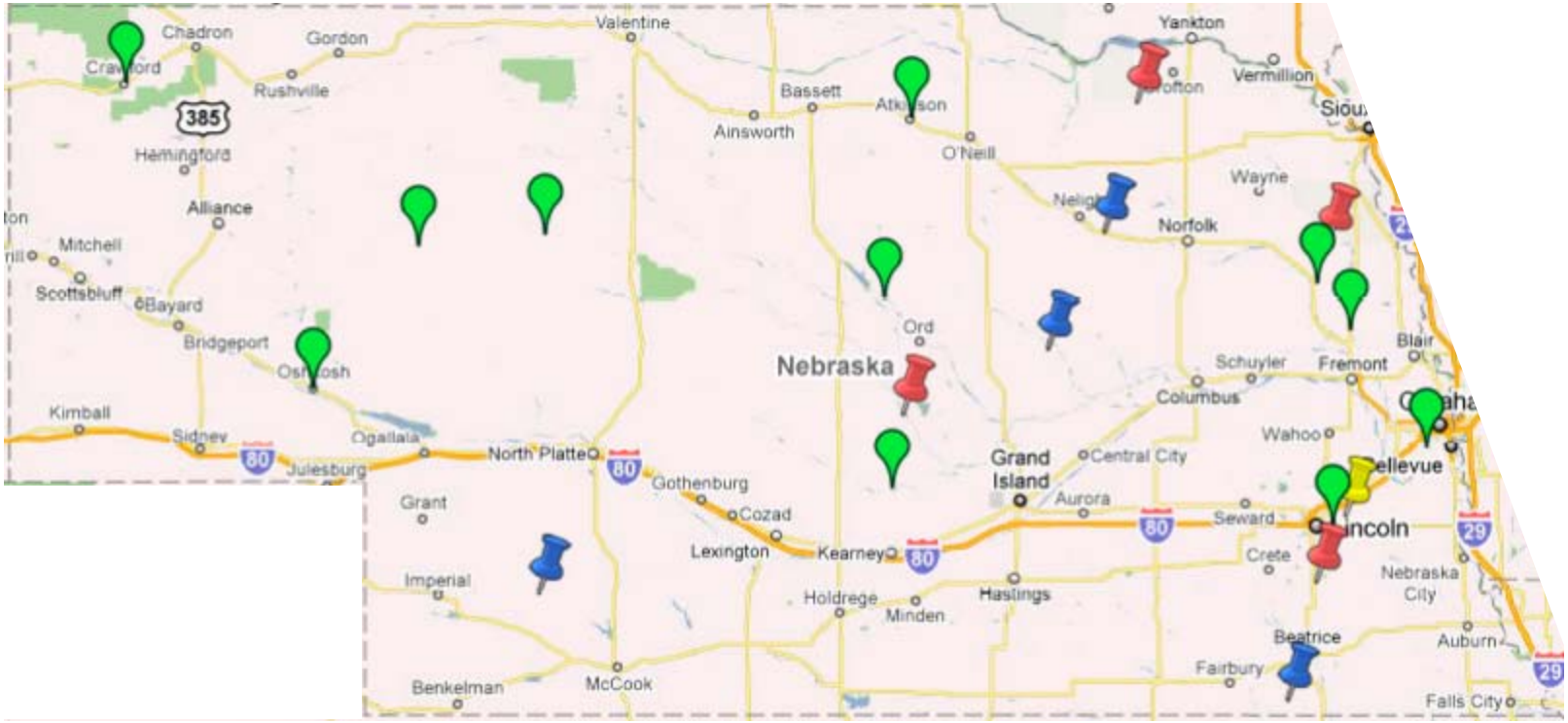

Blue and Yellow: Installed turbines for 1st Year

Red: Installed turbines for 2nd Year

Green: Installations approved for 3rd Year or in Process

Two Examples of Energy Storage Projects

H_2 from Wind Project

2.4 kW Skystream Turbine at UNL

- Use a small turbine (<10 kW) to produce off-peak demand electricity to operate an electrolyzer for H_2 production as an intermediary form of energy storage.
  - Electrical energy is the largest component of cost in producing H_2 from electrolysis; currently prices are above \$0.06/kWh (H_2 production cost of over \$4.00/kg)
  - DOE target is \$0.045 to \$0.055/kWh electricity cost for production of H_2 at \$3.00/kg
- Use PEM (polymer exchange membrane) Electrolyzer instead of Alkaline for safer and cleaner operation.

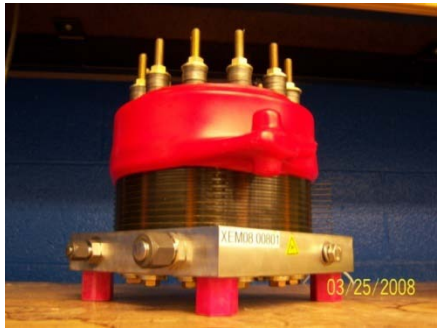

- Develop integrated power conversion system between turbine generator and electrolyzer cells to minimize costs and maximize electrical power efficiency; thus minimizing electrical cost to approach DOE targets.

H_2 Production from Wind - Results

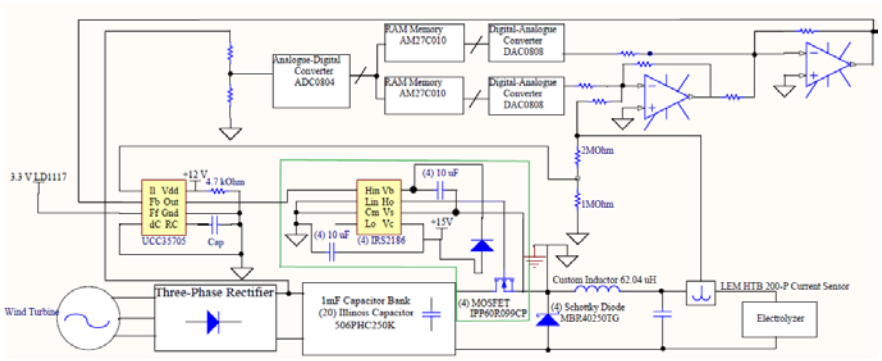

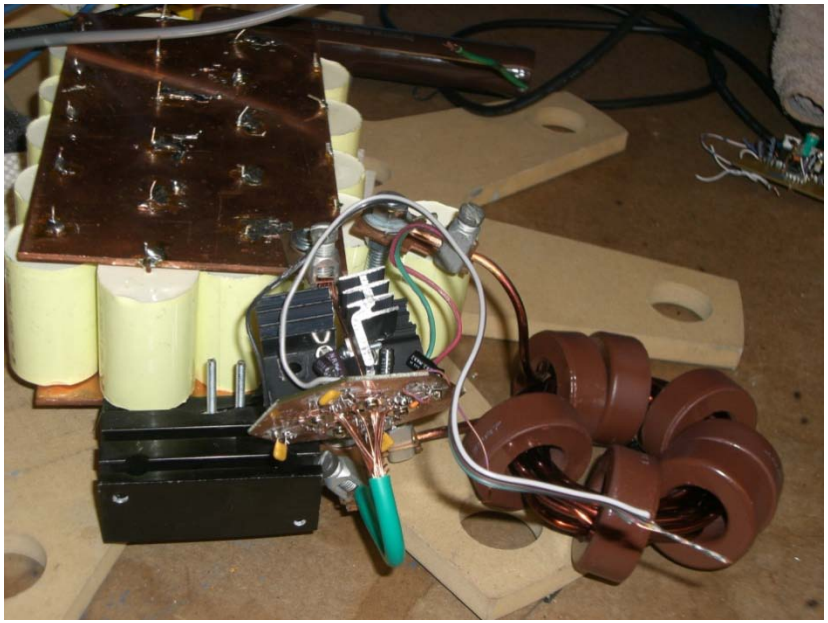

- It is estimated that integration of the power electronics systems will reduce the hydrogen production costs by up to 7%.
- Further reduction in electricity costs must come from
  - improved electrolyzer technology and
  - reduced electrical energy production costs by delivering electricity from unused renewable generating sources (e.g. not hydrocarbon fueled generators).

Carbon Nano-Onions for Ultracapacitors

- Charge/discharge rate is 200 V/s that is 3 orders of magnitude faster than activated carbon supercapacitor.

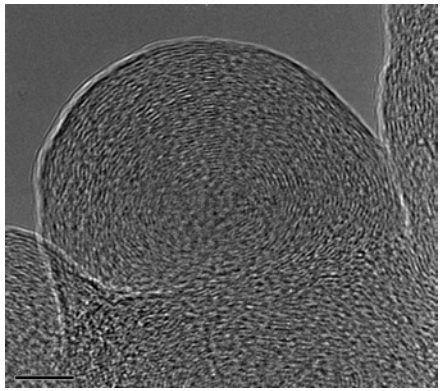

Nanometer sized non-edible whole carbon "onions"

Advantages: High specific surface area

High electrochemical stability

High electronic conductivity

- electrode: activated carbon, d = 5 µm;
- electrolyte:

  - solution of acetonitrile solvent;

  - quaternary salt TEATFB

  (tetraethyl ammonium tetrafluoroborate).

❖Current achievements： CNOs synthesized

➢Experiment results

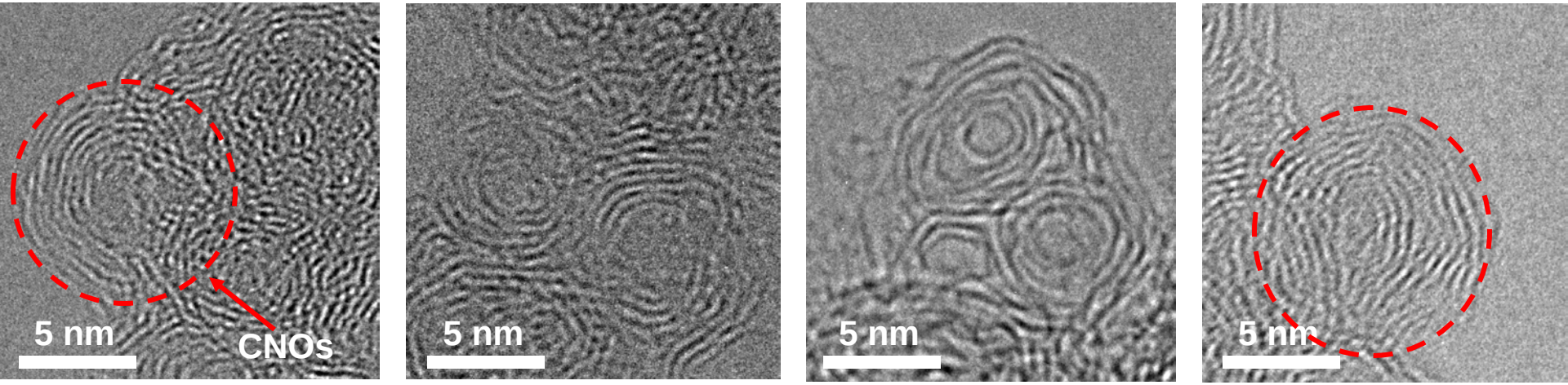

Transmission electron microscopic images of the CNOs prepared using laser irradiation.

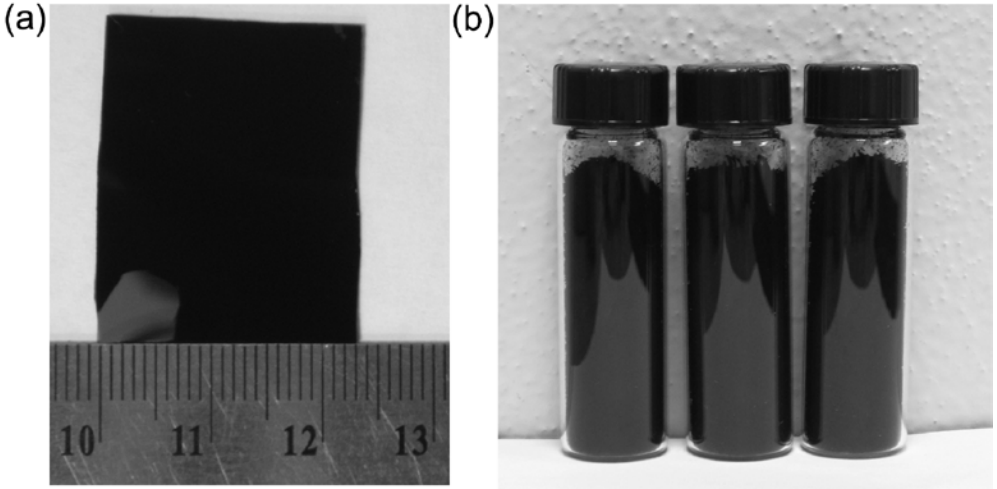

Optical images of deposited CNOs on a silicon wafer, (a), and collected CNO powder, (b).

Other Wind Energy Research

- Wind Turbine Safety and Reliability
  - M. Riley and E. Jones (Industrial and Management Systems Engineering)
- Innovative Wind Tower Systems
  - A. Azizinamini (Civil Engineering)
- Sustainable Energy Options for Rural Nebraska
  - William Kranz, (Biological Systems Engineering), *et. al.*
- The Viability of Distributed Wind Generation for Farm and Rural Communities
  - Terence Sebora (College of Business Administration), Ron Yoder (Biological Systems Engineering), Jerry Hudgins (Electrical Engineering)

UNL's Sustainable Energy Testing Facility

Haskell Agricultural Laboratory, Concord, NE

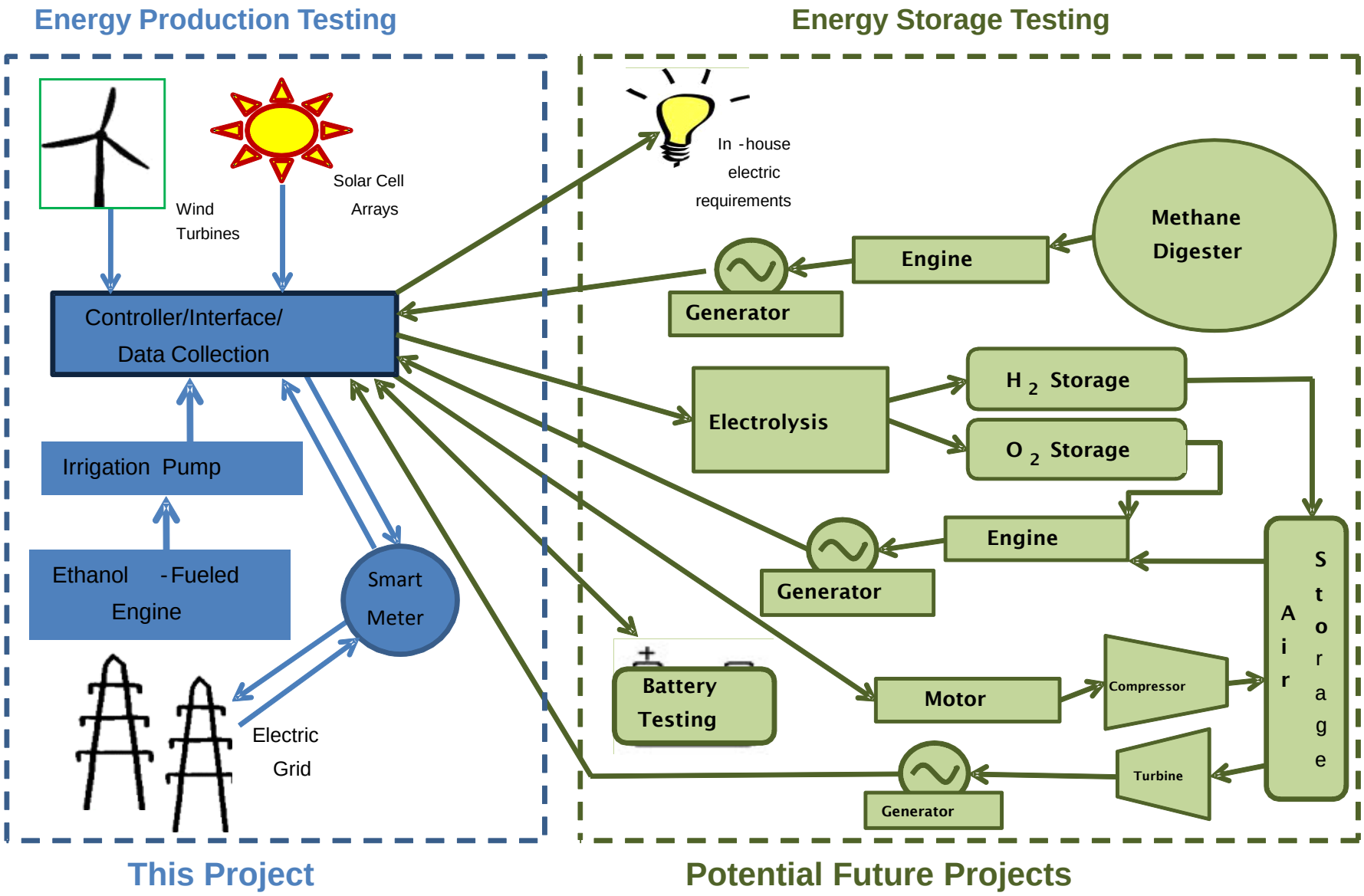

Contact Information

Nebraska Wind Applications Center

and

Department Of Electrical Engineering

http://engineering.unl.edu/academicunits/electricalengineering/

Nebraska Center for Energy Sciences Research

http://ncesr.unl.edu/