Single Top Plate Corner Framing

No Scale
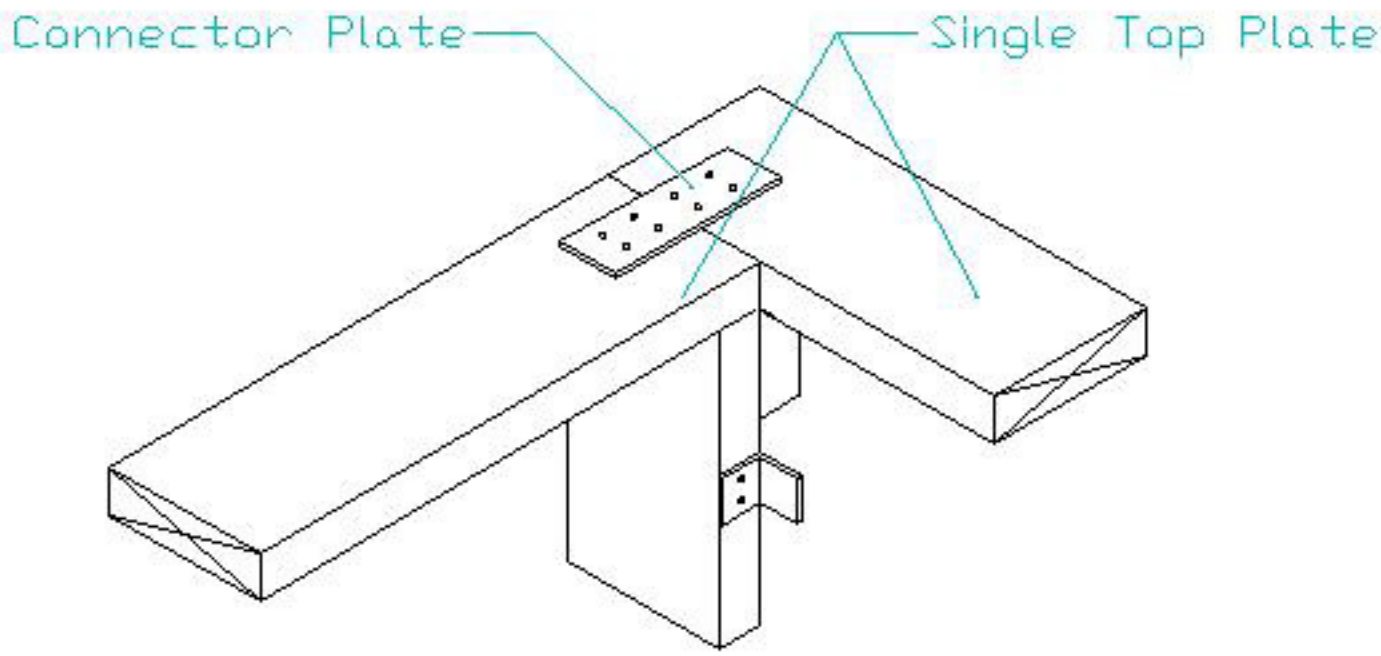
Detail 3