Single Top Plate Connector Detail
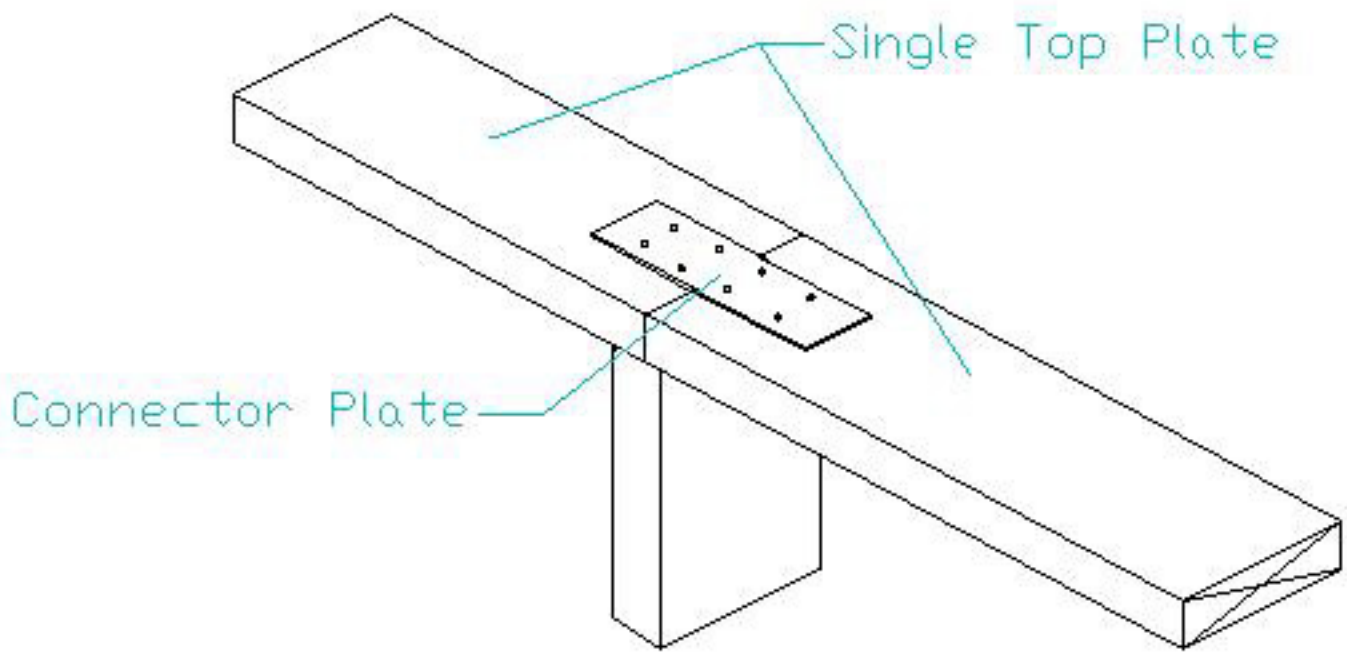
No Scale Detail 4