Slab-On-Grade Insulation Interior w/ Insulated Joint

No Scale
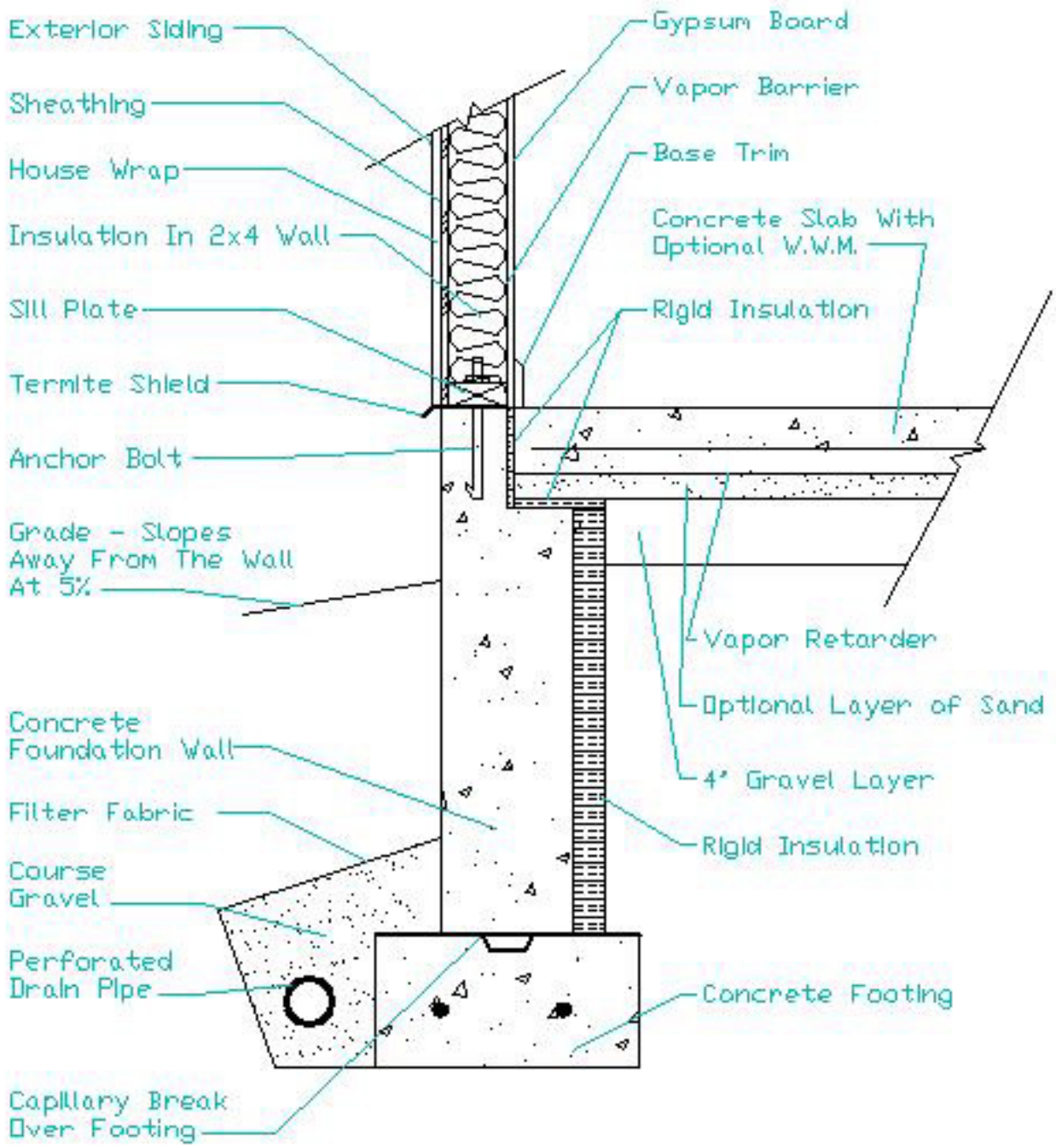
Detail 23