Insulated Window & Door Header - Double Header

No Scale
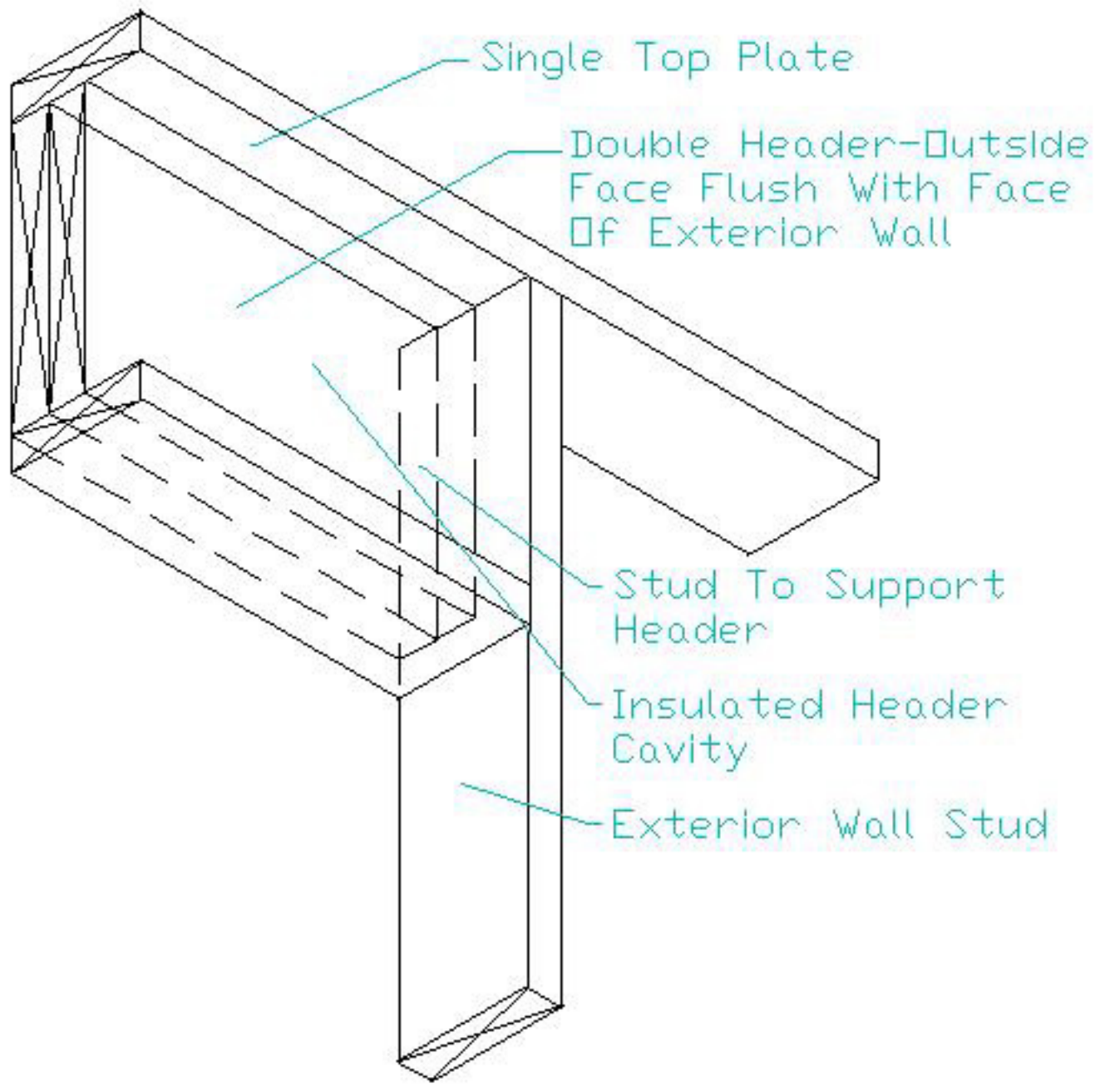
Detail 9