Exterior/Interior Wall Connection w/ Single Top Plate

No Scale
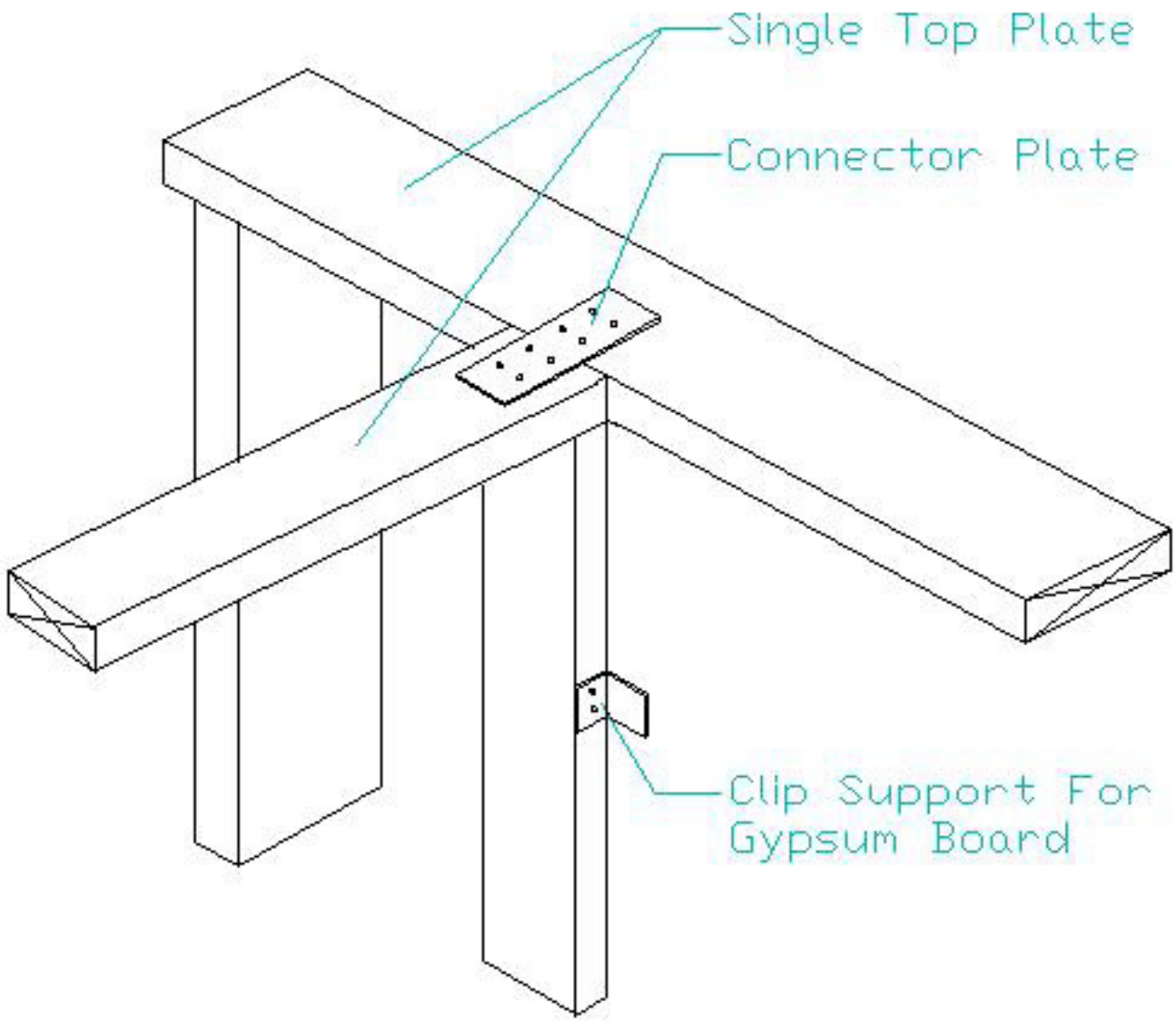
Detail 5